40 314 003 **ATRIO TOILET BRUSH SET**

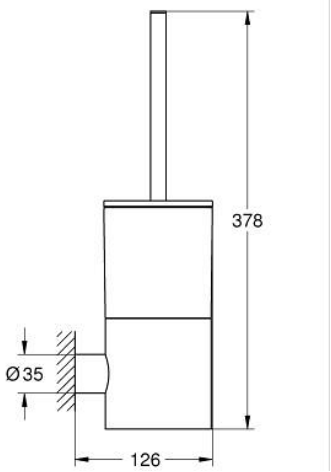

PRODUCT DESCRIPTION

- Colour: chrome
- material: glass / metal
- wall mounted
- concealed fastening
- GROHE LongLife finish

40 314 003 **ATRIO TOILET BRUSH SET**

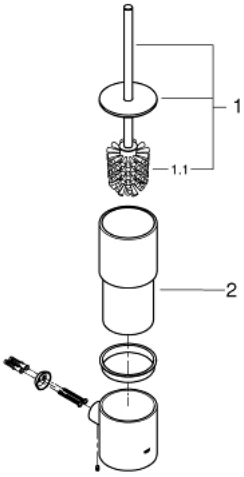

SELECT SPARE PART: , June 2017 – now

1: null (Spare part-nr. null)

2: null (Spare part-nr. null)