21 019 003 **ATRIO SINGLE-HOLE BASIN MIXER L-SIZE**

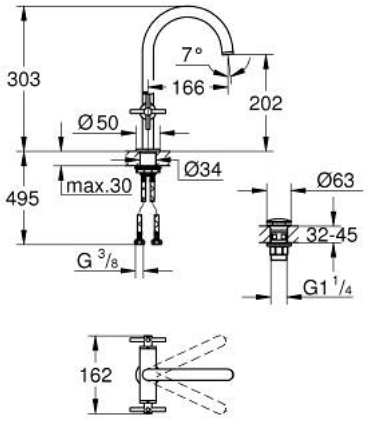

PRODUCT DESCRIPTION

- Colour: chrome
- ceramic headparts 1/2", 90°
- GROHE LongLife finish
- GROHE EcoJoy 5.7 l/min laminar mousseur
- rapid installation system
- swivel tubular spout with mousseur and stop limiter
- Push-open waste set 1 1/4"
- flexible connection hoses
- with cross handles
- Two different sets of caps included. One set with "H" and "C" marking, one set without marking.

21 019 003 **ATRIO SINGLE-HOLE BASIN MIXER L-SIZE**

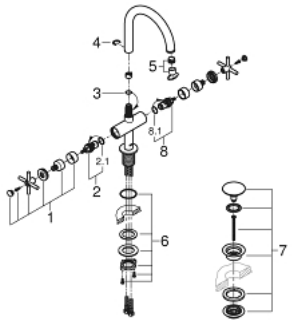

SELECT SPARE PART: , August 2018 – now

1: Cross handles (Spare part-nr. 18026003)

2: Ceramic headpart, 1/2" (Spare part-nr. 45883000)

2.1: O-ring ø18.2 x ø1.7 (Spare part-nr. 0392400M)

3: Sealing washer (Spare part-nr. 0128500M)

4: Safety ring (Spare part-nr. 4826600M)

5: Flow straightener (Spare part-nr. 48408000)

6: Shank fastening assembly (Spare part-nr. 48384000)

7: Pop-up waste set (Spare part-nr. 65807000)

8: Ceramic headpart, 1/2" (Spare part-nr. 45882000)

8.1: O-ring ø18.2 x ø1.7 (Spare part-nr. 0392400M)