20 169 003 **ATRIO 3-HOLE BASIN MIXER S-SIZE**

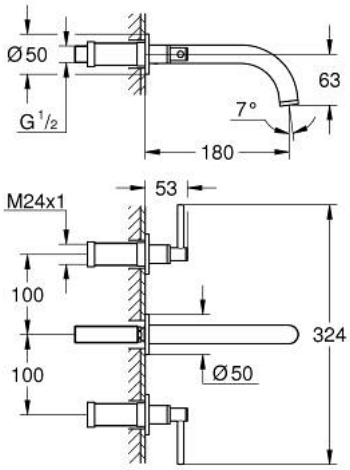

PRODUCT DESCRIPTION

- Colour: chrome
- wall mounted
- to be used with rough-in set 29 025 002
- without concealed body
- valves hot/cold with ceramic headparts 1/2" - 90°
- GROHE LongLife finish
- GROHE EcoJoy 5.7 l/min laminar mousseur
- centre distance 200 mm
- projection 180 mm
- with lever handles
- Two different sets of caps included. One set with "H" and "C" marking, one set without marking.

20 169 003 **ATRIO 3-HOLE BASIN MIXER S-SIZE**

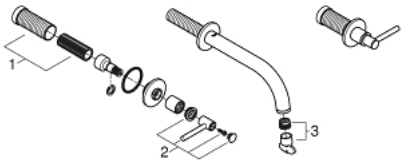

SELECT SPARE PART: , April 2017 – now

1: Extension (Spare part-nr. 45988000)

2: Lever handles (Spare part-nr. 18027003)

3: Flow straightener (Spare part-nr. 48408000)